In Vivo Photoacoustic and Pulse Echo Imaging of a Pancreatic Tumor Using a Hand Held Device

Leonardo G. Montilla,[1] Ragnar Olafsson,[2] and Russell S. Witte[1,3]

[1]College of Optical Sciences, University of Arizona, Tucson, AZ 85724 USA
[2]Department of Electrical Engineering, University of Iceland, Reykjavik, Iceland
[3]Department of Radiology, University of Arizona, Tucson, AZ 85724 USA
lgm@email.arizona.edu

***Abstract*—Ultrasonography and computed tomography are often used to diagnose pancreatic cancer. Using similar equipment as ultrasonography, photoacoustic (PA) imaging can provide vascular information over the same region of interest. Information about the vascularity in and around a lesion can be used to aid in the characterization and diagnosis of various cancers. Current PA imaging setups are restricted to bulky bench-top setups, limiting its practicality for clinical research. An ideal imaging platform would be non-invasive, real-time, portable, and inexpensive. We designed and fabricated an attachment to a clinical ultrasound probe which houses an optically transparent acoustic reflector in water. The design enables laser illumination in-line with the acoustic propagation path. The detector array simultaneously captures unbeamformed data on 64 elements at frequencies up to 10 MHz. We used the device to image *in vivo* a subcutaneous tumor in a SCID mouse implanted with Capan-2 pancreatic cancer cells and also a mouse pancreas embedded in a gel. Laser pulses (5 ns, 13 mJ/cm^2) were transmitted through an optical window in the device, providing line illumination below the skin surface. Real-time 2D PA images between 700 nm and 960 nm were captured along with conventional pulse echo (PE) ultrasound to examine different sources of contrast in the tumor. The PE image identifies the acoustic window, skin surface, and variation in acoustic impedance within the tumor. PA images visualized areas of near infrared light absorption 4 mm deep within the tumor. Co-registered PE images provided an anatomical reference. This *in vivo* study demonstrates how a simple adapter to a clinical ultrasound array can be used for real-time simultaneous PE and PA imaging of cancer. With this efficient and practical design, cancer research can capitalize on noninvasive optical contrast below the tissue surface. With an optimized design, clinicians can incorporate PA imaging with routine ultrasound exams.**

***Keywords* – clinical ultrasound, in-line illumination, multi-modality imaging, pancreatic cancer imaging; photoacoustic spectroscopy, ultrasonography**

This work was supported in part by grants from the National Science Foundation (NSF-0853618), the Technology and Research Initiative (TRIF), and the Advanced Research Institute for Biomedical Imaging (ARIBI).

I. Introduction

Clinicians routinely use ultrasound to aid in the diagnosis and treatment of tumors. However, ultrasound often fails to detect molecular or pathological changes due to poor contrast in soft tissue [1]. Doppler ultrasound is able to partially overcome this challenge by imaging flow, which is capable of detecting tumor-associated neoangiogenesis during early-stage ovarian cancer in hens [2]. Though these techniques offer some noninvasive insight about the tissue, pure ultrasound cannot image either oxygenation saturation or hemoglobin concentration.

Photoacoustic imaging (PAI) uses optical absorption to induce ultrasonic pressure waves which can be used to create high resolution images with high contrast. Incorporating photoacoustic capabilities, efficiently and inexpensively, into current ultrasound systems would be highly desirable by both the research community and clinicians. Most photoacoustic imaging systems are bench-top setups [3]. A hand held pulse echo and PAI system optimized to image 1 to 10 mm, or deeper, beneath the contact surface has been used to investigate diagnostic possibilities for various cancers such as cancers of the skin, breast, and thyroid [4,5,6]. Designs for photoacoustic on-axis illumination transducers have been published as far back as 1996 and offer advantages in efficient light coupling and simplified optical lens design [7]. However, these systems which consist of an annular transducer or synthetic array with a hollow central bore are not commercially available and are expensive [8]. Our research, group as well as others have, demonstrated hand-held attachments to clinical systems, and some ultrasound companies are working on developing PAI into their system [9,10,11]. These designs use a similar illumination approach of coupling a fiber bundle to the outside of a linear array ultrasound probe such that the light enters the tissue at oblique angles focused toward the tissue in the ultrasound imaging plane (Fig 1). These designs suffer from poor light efficiency, due to a longer optical path distance through the tissue to arrive at the imaging plane. This approach also restrains desirable optical fluencies to specific depths.

We previously proposed and designed a proof-of-concept system which makes efficient use of ANSI limited laser irradiance levels by subjecting the imaging plane with illumination in-line with the acoustic propagation path [12]. This approach takes advantage of the shortest noninvasive optical path into the tissue imaging plane and most useful for reflection mode PAI. Moreover, all depths are illuminated up to the limits of light penetration. We now demonstrate a simple inexpensive adapter to a clinical probe for *in vivo* photoacoustic imaging of a mouse tumor and *ex vivo* imaging of a mouse pancreas. Moreover, the simple design could be easily modified for human imaging.

II. Methods

A. Instrumentation

A photoacoustic enabling device (PED) is an attachment to a commercial ultrasound probe which takes advantage of an optically transparent acoustic reflector to illuminate the target [12]. Our new and improved design over our previous system is illustrated Fig. 1. This second generation PED was designed using SolidWorks to accommodate Zonare Medical System's L10-5 linear probe. The PED was fabricated using a rapid prototyping machine (Objet, Connex 500™) for less than $30 in material costs. A photograph of the actual printed parts is depicted in Fig. 2. In this version, light is coupled to the device via a 1.5 mm diameter multi-mode fiber. Compared to the first generation [12], the housing is over three fold lighter and more compact and simpler to attach and detach using only two screws. The design also incorporates a fill and drain outlet to the isolated water chamber which houses the acoustic reflector. This provides access to the fluid compartment without the need to detach the device from the probe. Typically, before imaging, the PED is filled with about 20 mL of distilled water and later drained for storage.

An optical parametric oscillator pumped by a frequency doubled pulsed Nd:YAG (Continuum™) was used to provide 5 ns laser pulses through the PED and onto the target (700-960nm). A 2.5 inch length and 1 inch diameter tube attached to the PED housed the optics to appropriately bend the light rays to provide line illumination 1 cm beyond the outside the face of the device. The tube of optics consists of a fiber coupler, an achromatic collimator, and a cylindrical lens to focus the light in the elevation direction similar to the acoustic focus.

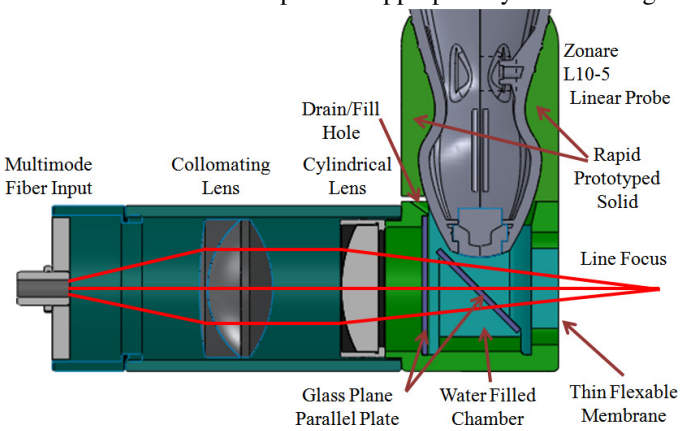

Fig. 1. SolidWorks opto-mechanical drawing showing the various components of the PED and a sketch of the optical ray path during operation.

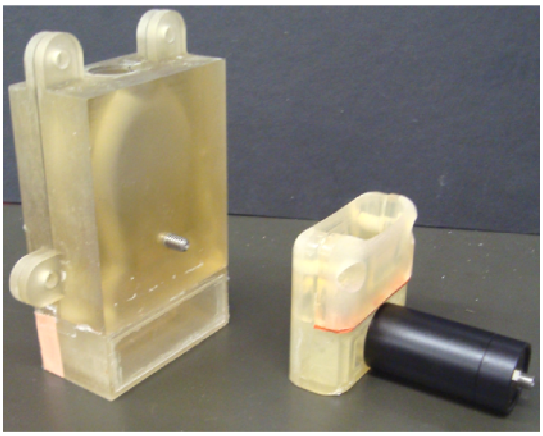

Fig. 2. Photo of the rapid prototyped PEDs designed for Zonare's L10-5 probe. First generation on left and second generation on the right.

Matlab™ (Mathworks) was used to control communication with the laser, motors (Velmex), ultrasound scanner (Zonare Medical Systems, zOneUltra), timing generator (Quantum Composer, 9520) and, to capture the photo diode signal, a fast data acquisition board (Signatec, PDA12). All software to control the instruments during a scan and later process the raw data into images was controlled in Matlab™ with custom software. A fast photodiode (ThorLabs, Det10A) recorded the pulse-to-pulse variation, which was used to normalize the energy for different wavelengths and pulses.

B. Setup and Experimental Procedures

1) *Ex vivo* mouse pancreas imaging

A mouse pancreas was extracted and suspended in an Agarose GPG/LE™ gel to create a stationary rugged sample (Fig. 4a). The pancreas was laser illuminated with 13 mJ/cm^2, and imaged while hand holding the second generation PED coupled to the sample using ultrasound gel (Fig. 3a). During data acquisition at 20 Hz, the probe was moved by hand to various locations in the gel. The sample and PED was also held in a stationary position, using a table top as support, and a hyperspectral data set was acquired consisting of 10 frames per wavelength in the range of 700 nm to 950 nm at 10 nm increments. A similar data set was also acquired in another position on the pancreas.

2) *In vivo* pancreatic tumor imaging

Capan-2 pancreatic cancer cells were subcutaneously implanted into a SCID mouse model on the back near the base of the tail. After a tumor grew to about 5-mm diameter, the mouse was anesthetized (isofluorane 1-2%) and imaged *in vivo* (Fig. 3b). The mouse protocol was in accordance with IACUC at the University of Arizona. The first generation PED was positioned with ultrasound coupling gel to acquire cross sectional images of the tumor region. Four dimensional data (3D space + optical wavelength) was acquired by

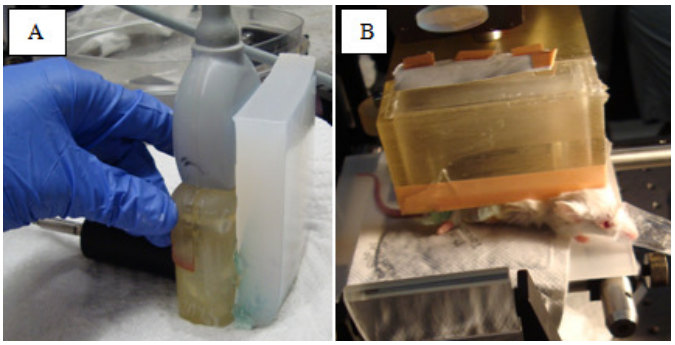

Fig. 3. Photos during the data acquisition. (A) Gel coupling the *ex vivo* mouse pancreas to the PED by hand. (B) Imaging a mouse *in vivo* with pancreatic cancer on its back.

scanning the mouse 10 mm in the elevational direction at wavelengths from 700 nm to 950 nm in 50 nm steps using 18 mJ/cm^2 of laser energy on the surface. A hyperspectral two dimensional image was also recorded at the peak of the tumor protrusion by using 10 nm steps in the wavelength range of 700 nm to 960 nm. Pulse echo images acquired using the L10-5 probe were complemented with high resolution pulse echo images using Visual Sonics Vevo 2100 and their MS550D (55 MHz maximum) probe. This allowed us to get a high resolution image of the tumor area and confirm vascular flow using pulse Doppler, prior to imaging the tissue with the PED.

III. Results and Discussion

The easy functionality of the new PED was clearly experienced by the operator of the hand held device. The optics was automatically aligned according to the fabrication of the device. The SMA- coupled multimode fiber was easily screwed to the PED, which conformed to the linear probe. Fig. 4a depicts a cross section of the pancreas that was imaged *ex vivo*. The PE image (Fig. 4b), displayed with a dynamic range of -40 dB from peak intensity, indicates the location of the pancreas. A PA image using 800 nm light and a dynamic range from peak to -15 dB is shown in Fig. 4c. Within the same area, a strong PA signal in the lower right quadrant of the pancreas is suggestive of blood in the region.

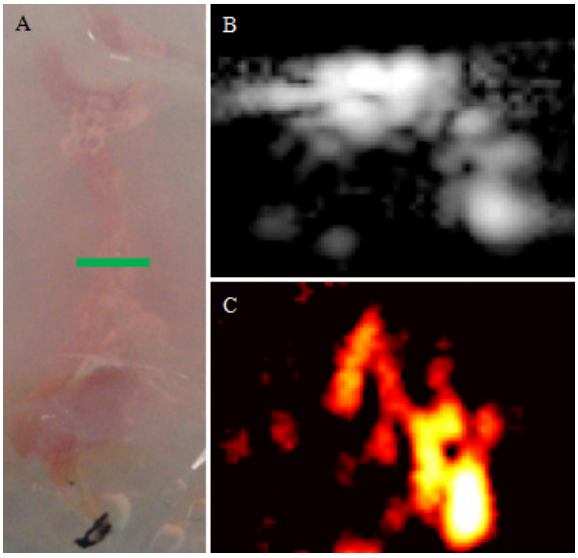

Fig. 4. (A) Excised mouse pancreas in 1.5% Agarose™ gel. (B) -40 dB PE image on the image plane indicated by green line in (A). (C) -15 dB PA image from 800 nm light, corresponding to the same plane as (B).

Sagittal, tangential, and coronal views of a pancreatic mouse tumor (*in vivo*) are displayed in Fig. 5a-d. 3D co-registered PA and PE images demonstrate the capability of the PED. The PA data was acquired simultaneously with the PE for an automatic co-registration of the two images. The PE data is displayed on a 35 dB scale and the PA is displayed on a 15 dB scale. The presence of a large vasculature is confirmed with the Color Doppler transverse image acquired using the Vevo 2100 (Fig. 5C). The transverse image of the tumor using the two different probes does not co-register exactly because the mouse was moved between the two imaging setups. A 3D rendering is another visualization of the data set (Fig. 5E).

Hyperspectral images of the mouse tumor are presented in Fig 6. All three areas exhibit less PA signal at longer wavelengths—suggestive of a decreasing absorption profile. This feature is typical for de-oxygenated hemoglobin. The Color Doppler images from the Vevo 2100 also support the presence of blood vasculature in the form of flow. We further processed the data at every pixel in the image by calculating the slope of the best-fit line of the PA signal vs. wavelength. The slope of the spectrum is imaged in Fig. 6B. The image of the slopes of the spectrum (30 dB scale) is suggestive of deoxygenated hemoglobin. A hypoxic tumor is not surprising since tumors are understood to grow rapidly and deprive the surrounding tissue from oxygen [13].

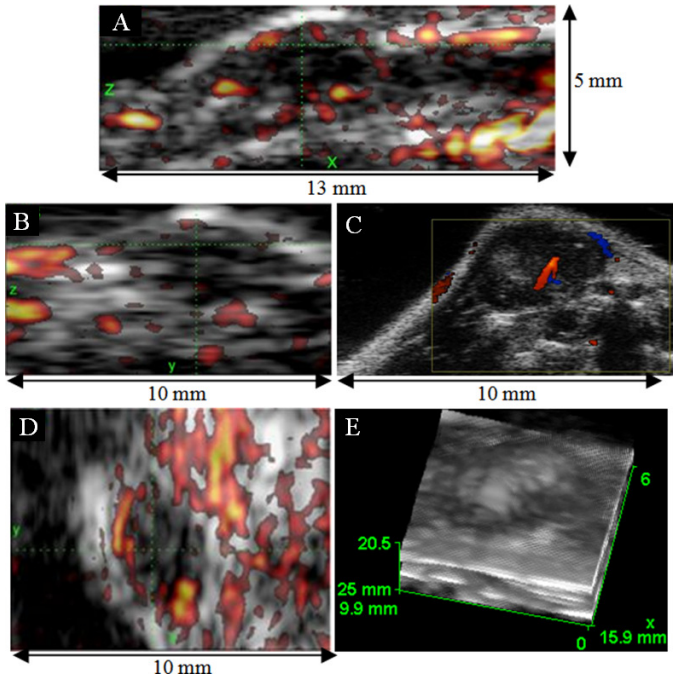

Fig. 5. *In vivo* imaging a pancreatic tumor in a mouse. PE in gray scale and PA in hot scale. (A) Sagittal plane (B) Transverse plane (C) Vevo 2100 high resolution PE image (D) Coronal plane (E) 3D PE rendering of the region.

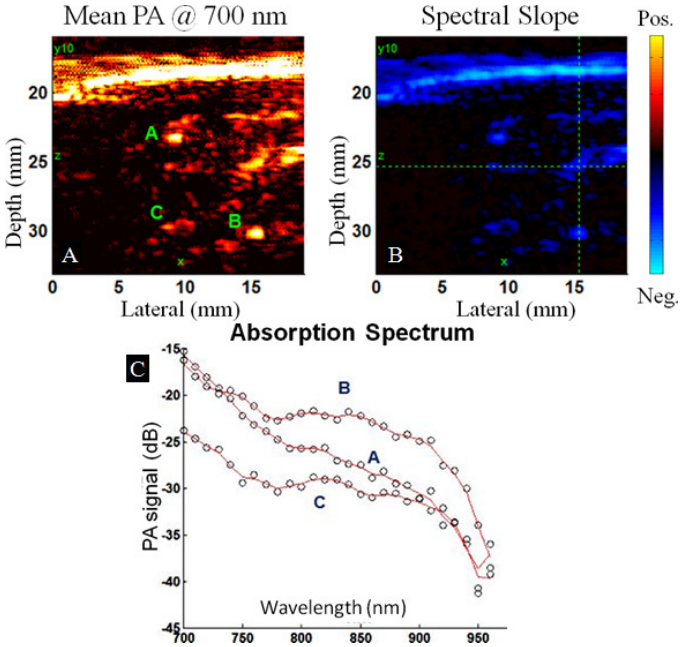

Fig. 6. *In vivo* imaging a pancreatic tumor in a mouse. (A) PA mean of 10 frames at 700 nm laser illumination. (B) Slope of a line fitted to the spectrum of each pixel in the image plotted on a hot cold color scale. (C) The spectrum at three regions labeled in the PA image shown in (A).

IV. Conclusion

We have successfully demonstrated simultaneous PA and PE imaging in a living mouse using a clinical ultrasound scanner. A PED can be fabricated for most clinical ultrasound probes currently in the market.

Incorporating the necessary software into the clinical scanner will make photoacoustic imaging immediately available to clinicians. Routine ultrasound screenings could be combined with PA imaging and spectroscopy for enhanced contrast based on the absorption of light.

Acknowledgment

Special thanks to Dr. Mark Pagel and the Experimental Mouse Shared Service in the Arizona Cancer Center for assistance with the pancreatic tumor preparation. We would also like to gratefully acknowledge technical support from Zonare Medical Systems.

References

[1] M. Xu and L.V. Wang, "Photoacoustic imaging in biomedicine," *Review of Scientific Instruments*, Vol. 77, 041101 (2006).

[2] A. Barua, P. Bitterman, J.M. Bahr, M.J. Bradaric, D.B. Hales, J.L. Luborsky, and J.S. Abramowicz, "Detection of Tumor-Associated Neoangiogenesis by Doppler Ultrasonography During Early-Stage Ovarian Cancer in Laying Hens: A Preclinical Model of Human Spontaneous Ovarian Cancer," *J Ultrasound Med* Vol. 29:1773-182 (2010).

[3] K. Maslov, H.F. Zhang, S. Hu, and L.V. Wang, "Optical-resolution photoacoustic microscopy for *in vivo* imaging of single capillaries," Optics Let 33(9), 929-931(2008).

[4] W.E. Brant, "Chest, Thyroid, Parathyroid, and Neonatal Brain Ultrasound," *Fundamental of Diagnostic Radiology*, ch. 39, Lippinc. Williams & Wilkins (2007).

[5] M. P. Fronheiser, S.A. Ermilov, T. Khamapirad, A. Conjusteau, M.H. Leonard, R. Lacewell, K. Mehta, T. Miller, and A.A. Oraevsky, "Laser optoacoustic imaging system for detection of breast cancer," Journal of Biomedical Optics 14(2), 024007 (2009).

[6] S. Manohar, A. Kharine, J.C.G. van Hespen, W. Steenbergen, and T.G. van Leeuwen, "The Twente Photoacoustic Mammoscope: system overview and performance," Phys. Med. Biol. 50, 2543-2557 (2005).

[7] Shan, Q., Dewhurst, R.J., Kuhn, A., Pang, K.F. and Payne, P.A., "Modeling of a photoacoustic probe designed for medical applications," Ultrasonics 34, 575-577 (1996).

[8] S. Boonsang, J. Zainal, and R.J. Dewhurst, "Photoacoustic imaging using a frequency domain synthetic aperture focusing technique," *Proc. of SPIE*, Vol. 5486 (2004).

[9] M. Fournelle, H. Hewener, C G¨unther, H. Fonfara, H. Welsch, and R. Lemor, "Free-hand 3d optoacoustic imaging of vasculature," *Ultrasonics Symposium (IUS), 2009 IEEE International*, 2009, pp. 116-119.

[10] T. N. Erpelding, C. Kim, M. Pramanik, L. Jankovic, K. Maslov, Z. Guo, J. A. Margenthaler, M. D. Pashley, and L. V. Wang, "Sentinel Lymph Nodes in the Rat: Noninvasive Photoacoustic and US Imaging with a Clinical US System," *Radiology:* Volume 256: Number 1 July 2010.

[11] C. Kim, T. N. Erpelding, K. Maslov, L. Jankovic, W. J. Akers, L. Song, S. Achilefu, J. A. Margenthaler, M. D. Pashley, and L. V. Wang, "Handheld array-based photoacoustic probe for guiding needle biopsy of sentinel lymph nodes," *Journal of Biomedical Optics* 15-4, 046010 July/August 2010.

[12] L.G. Montilla, R. Olafsson, R.S. Witte, "Real-Time Pulse Echo and Photoacoustic Imaging Using an Ultrasound Array and In-line Reflective Illumination," *Proc. of SPIE*, Vol. 7564 (2010).

[13] J.M. Brown and W.R. Wilson, "Exploiting Tumour Hypoxia in Cancer Treatment," Nat. Rev. Canc., vol. 4, p437, June 2004.